INSTRUCTION MANUAL

WARNING: CHOKING HAZARD.
Small parts. Not for children under 3 yrs.

AGES: 5+YEARS

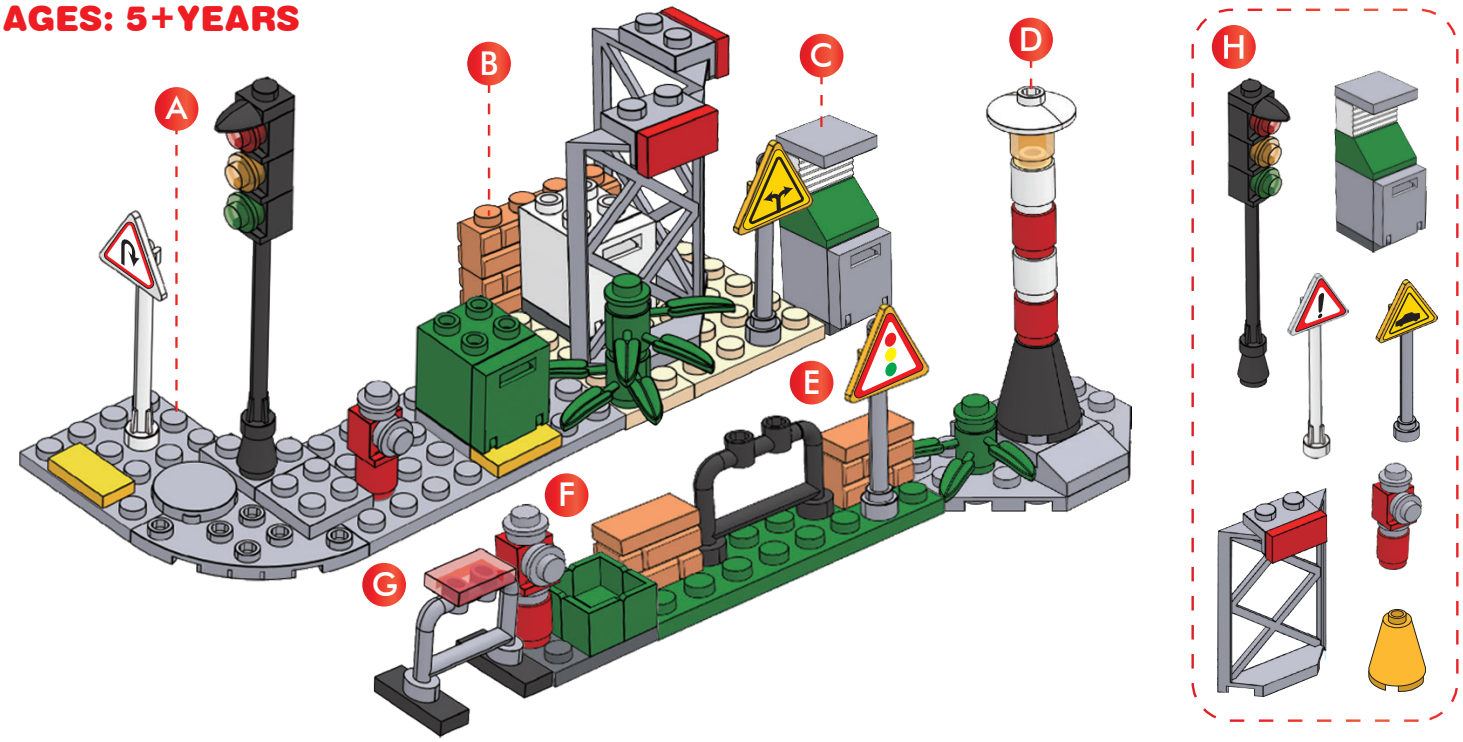

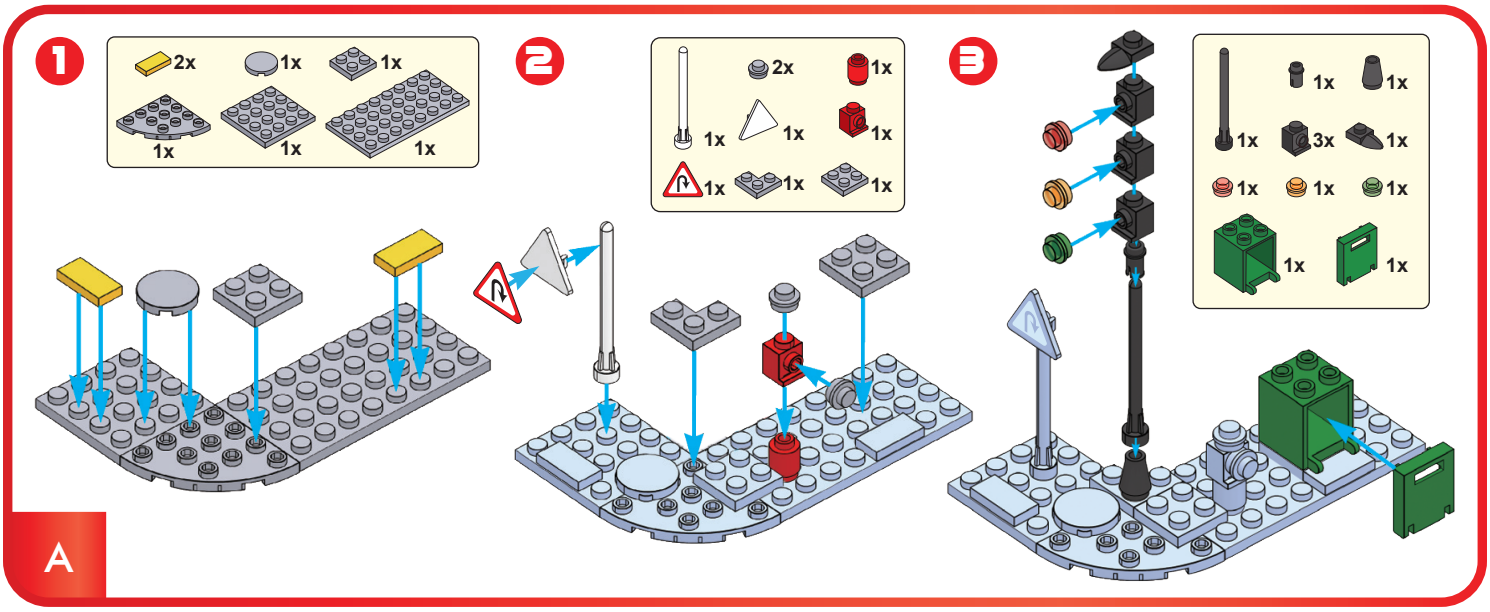

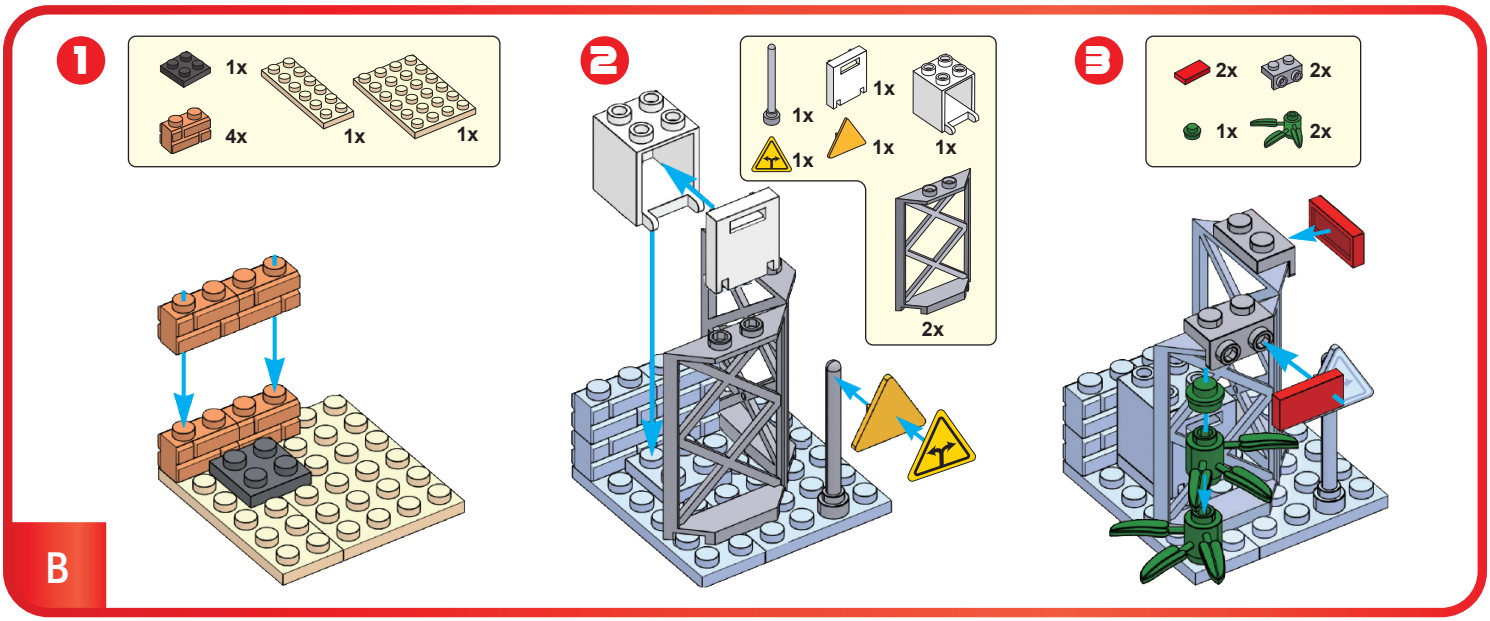

INSTRUCTION MANUAL

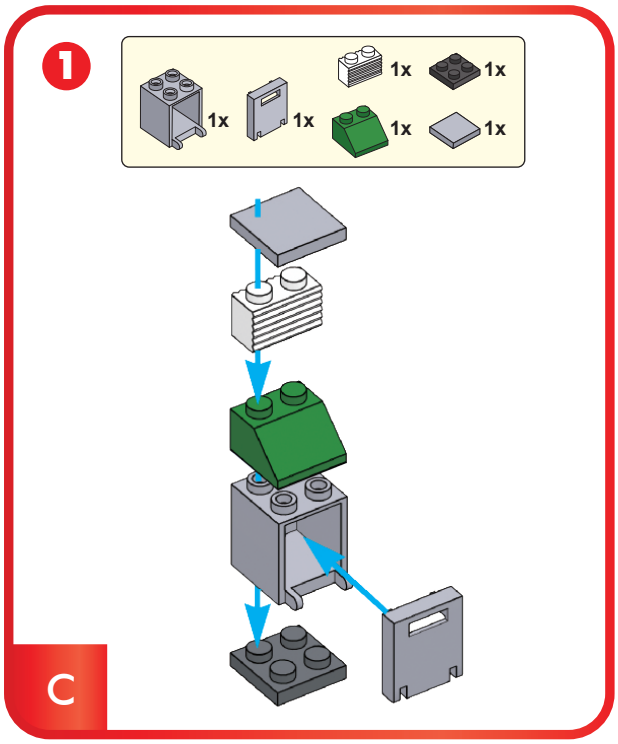

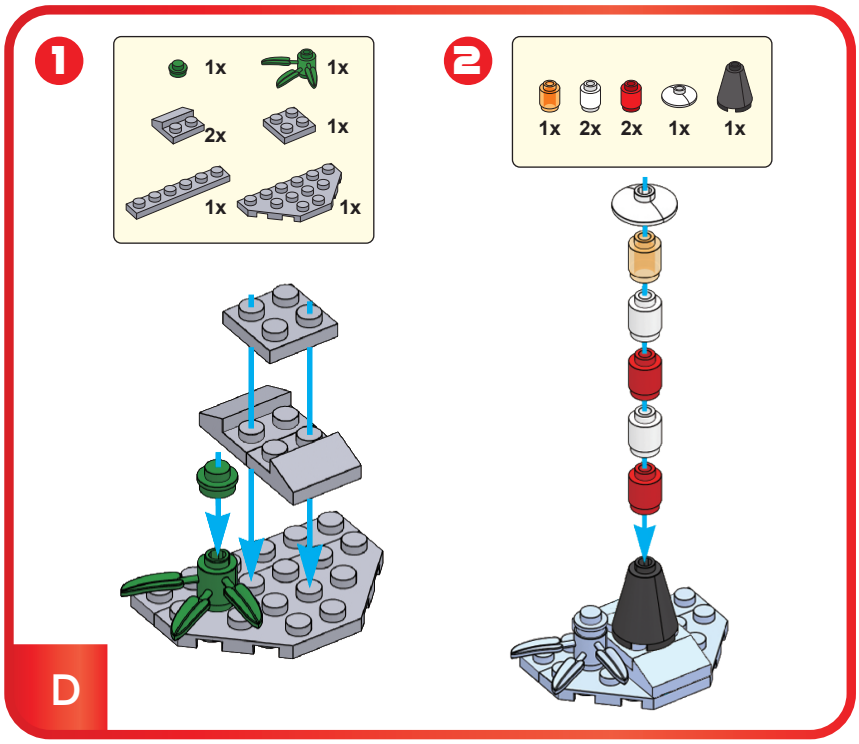

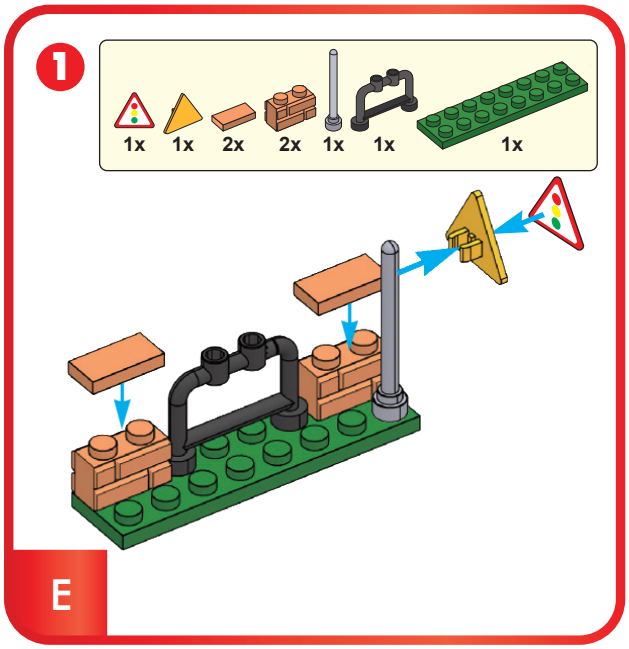

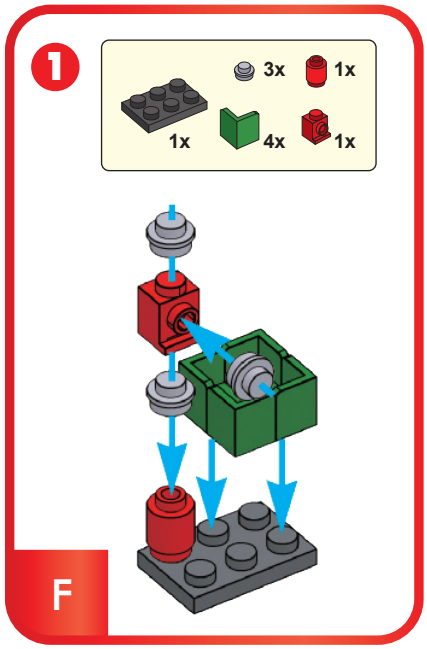

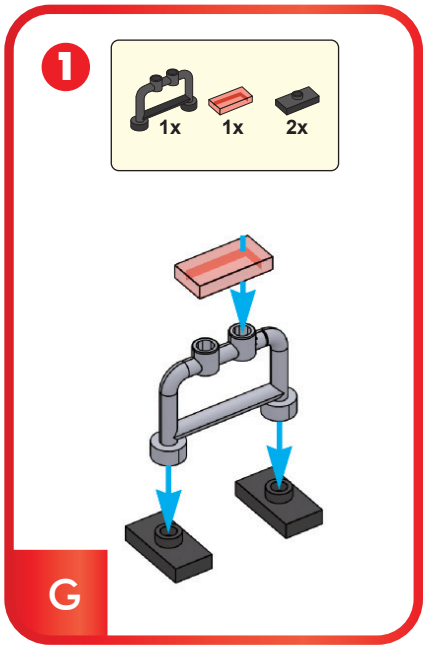

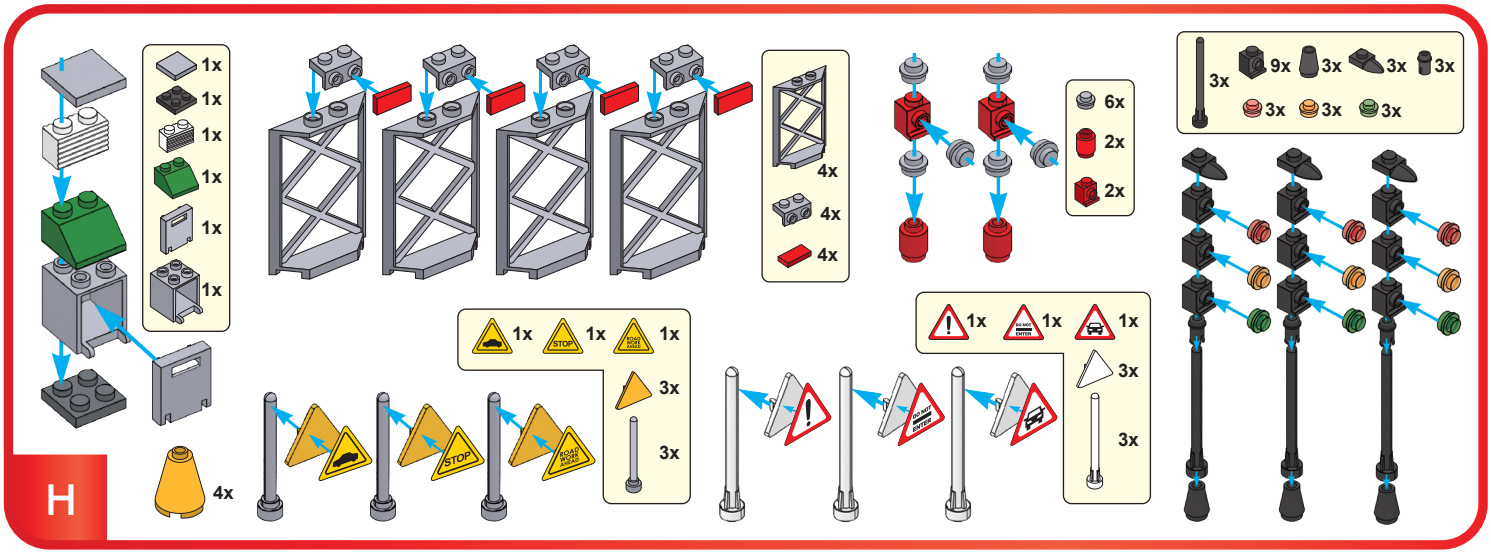

• ADULT SUPERVISION IS RECOMMENDED. • PRODUCT MAY VARY SLIGHTLY FROM THE IMAGE SHOWN. • COMPATIBLE WITH MAJOR BRICKS BRANDS.